Annette Counter Stool, Soft Gray

ANN-575-97

17.5w x 18.5d x 39.5h

Clear Lacquered Cerused Oak & Hand-Tied Cane Seat Back

Natural Linen Cushion

1/2 Yard Fabric to Re-Upholster(Can only be Professional Re-Upholstered)

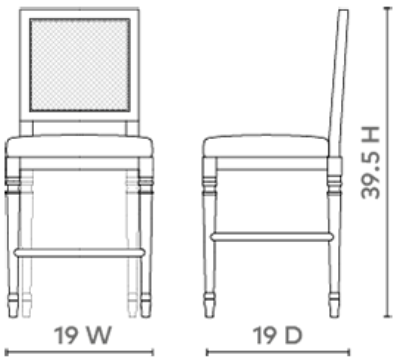

SCAN IT FOR MORE

VILLA & HOUSE

www.VandH.com