ASSEMBLY INSTRUCTIONS FOR DONATELLA (DON-350)

WHAT'S INCLUDED

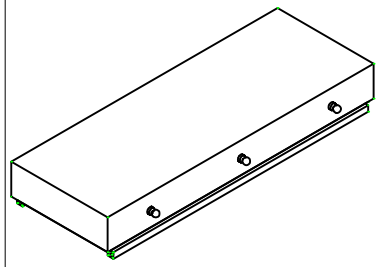

Ⓐ TABLE TOP (1 PCS)

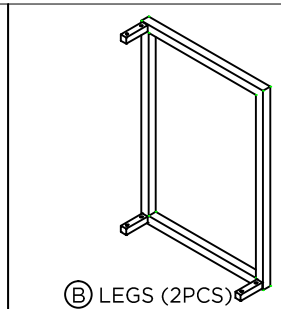

Ⓑ LEGS (2PCS)

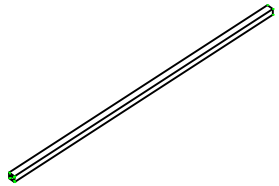

Ⓒ RAIL (1PCS)

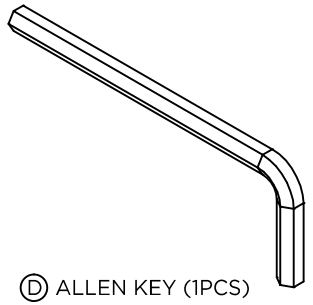

Ⓓ ALLEN KEY (1PCS)

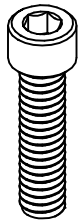

Ⓔ BOLTS (12PCS)

1 - Unpack all parts and hardware carefully.
- Place table top Ⓐ upside down on soft surface. (clean moving blanket, as an example)
- Place 1 leg Ⓑ on 1 side of table top. Use screws E and tighten with allen key Ⓓ Orient leg corner without mounting tab to front and bottom of table.
- Slide rail Ⓒ on to leg.

2 - Slide second leg B into rails top and bottom.
- Using bolts Ⓔ thread into legs tighten with allen key Ⓓ
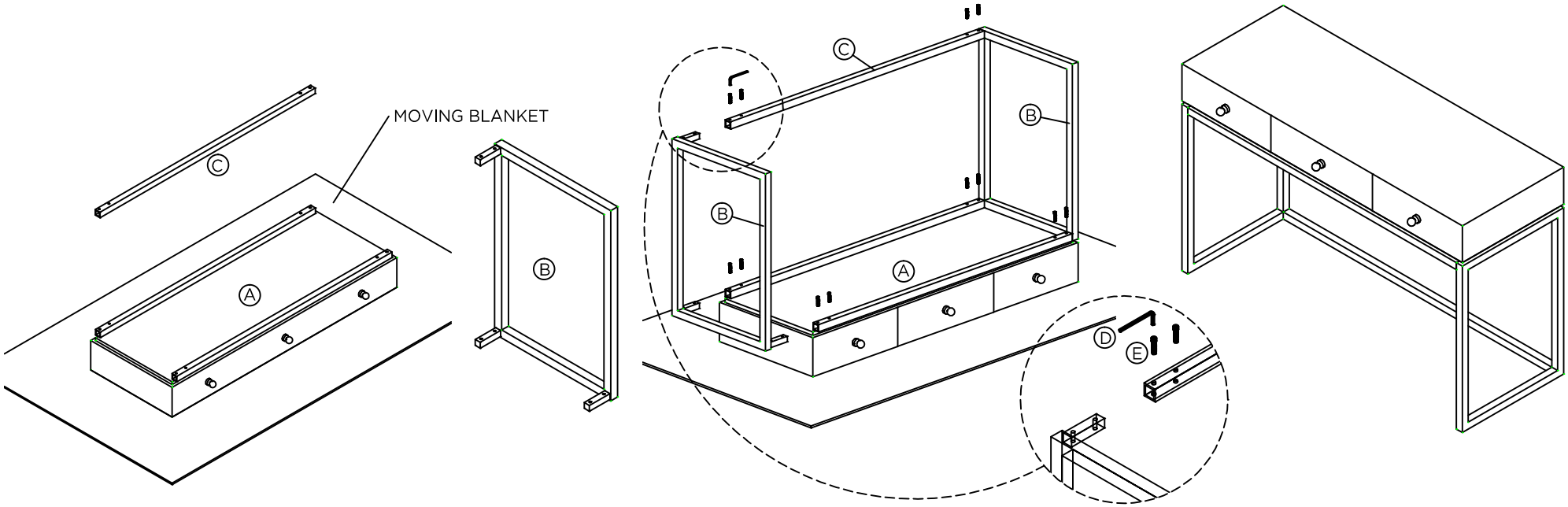
3 - Check all connections make sure everything is tight.
- Carefuly lift table unit and rotate to upright position.